Freestanding & Built-in Collection

2016

Built-in
Cooking

CDF22309X
90cm Built-in Double Oven with 6 Cooking Functions

Fan Air Heating | Easy Clean | 75L Main Oven Capacity

Main Benefits

Fan Air Heating System
Ensures speedy oven heating and faster cooking times

Fully Programmable Touch Control LED Timer
Gives you the option to set the time delay function and auto cut off timer

SimplySteam Cleaning Function™
Uses steam to loosen dirt and grease, enabling you to easily wipe the oven clean

Additional Benefits

- Catalytic side walls on the main oven absorb grease during cooking
- Static top oven and grill allow you to cook different meals simultaneously
- 3 wire shelves with stop positioning system
- Full width variable grill with recessed grill element
- Large viewing window and interior light
- Full width enamel cooking tray with internal grill rack
- Removable inner door glass makes cleaning easier

A Energy Rating Main Oven
A Energy Rating Top Oven

Capacity	Colour options
Main: 75L Top: 38L	Stainless Steel

Dimensions
W: 59.4cm H: 89cm D: 56.7cm

CTF22309X
72cm Built Under Double Oven with 6 Cooking Functions

Fan Air Heating | Easy Clean | 48L Main Oven Capacity

Main Benefits

Fan Air Heating System
Ensures speedy oven heating and faster cooking times

Fully Programmable LED Timer
Gives you the option to set the time delay function and auto cut off timer

SimplySteam Cleaning Function™
Uses steam to loosen dirt and grease, enabling you to easily wipe the oven clean

Additional Benefits

- Static top oven and grill allow you to cook different meals simultaneously
- 3 wire shelves with stop positioning system
- Full width variable grill with recessed grill element
- Large viewing window and interior light
- Full width enamel cooking tray with internal grill rack
- Removable inner door glass makes cleaning easier

A Energy Rating Main Oven
A Energy Rating Top Oven

Capacity	Colour options
Main: 48L Top: 38L	Stainless Steel

Dimensions
W: 59cm H: 71.5cm D: 55.5cm

CIF81X/W
60cm Built-in Single Oven with 4 Cooking Functions

Fan Air Heating | Easy Clean | 66L Capacity

Main Benefits

Fan Air Heating System
Ensures speedy oven heating and faster cooking times

Fully Programmable Touch Control LED Timer
Gives you the option to set the time delay function and auto cut off timer

SimplySteam Cleaning Function™
Uses steam to loosen dirt and grease, enabling you to easily wipe the oven clean

Additional Benefits

- Enamel oven lining makes cleaning easier
- Full width variable grill with recessed grill element
- Large viewing window and interior light
- Full width enamel cooking tray with internal grill rack
- Removable inner door glass makes cleaning easier

A Energy Rating

Capacity	Colour options
66L	Stainless Steel/ White

Dimensions
W: 59.4cm H: 59.5cm D: 56.7cm

CIF71W
60cm Built-in Single Oven with 4 Cooking Functions

Fan Air Heating | Easy Clean | 66L Capacity

Main Benefits

Fan Air Heating System
Ensures speedy oven heating and faster cooking times

Auto Cut Off Mechanical Minute Minder
Allows you to programme the oven to turn off for a maximum of 100 minutes

SimplySteam Cleaning Function™
Uses steam to loosen dirt and grease, enabling you to wipe the oven clean

Additional Benefits

- Enamel oven lining makes cleaning easier
- Full width variable grill with recessed grill element
- Large viewing window and interior light
- Full width enamel cooking tray with internal grill rack
- Removable inner door glass makes cleaning easier

A Energy Rating

Capacity	Colour options
66L	White

Dimensions
W: 59.4cm H: 59.5cm D: 56.7cm

CIHG21SX/W
60cm Side Control Gas Hob

Auto Ignition | Flame Safety Device | Easy Grip Control Knobs

Main Benefits

4 Burner Gas Hob
With both rapid and simmer burners for a variety of pan sizes

Built-in Flame Safety Device
The gas supply will be cut off if no flame is detected

Adjustable Flame Settings
Allows you to control the temperature when cooking

Additional Benefits

- Easy grip control knobs
- High gloss enamel pan supports
- Automatic mains ignition to all burners
- Suitable for LPG conversion

Colour options
Stainless Steel/White

Dimensions
W: 58cm H: 9.5cm D: 51cm

CIHV21B
60cm Side Control Ceramic Hob

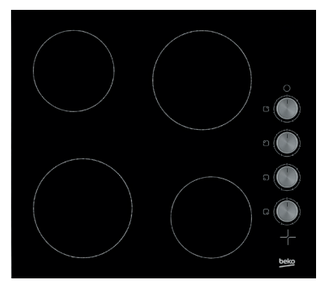

4 Zone Rapidlite | Adjustable Power Levels | Easy Grip Control Knobs

Main Benefits

4 Zone Rapidlite Hob
Fast pan heating and hot hob indicators for safety

1-6 Adjustable Power Levels
Provides increased cooking flexibility

Frameless Design
Makes cleaning easier

Additional Benefits

- Easy grip control knobs
- Wipe clean hob surface

Colour options
Black

Dimensions
W: 58cm H: 9.5cm D: 51cm

Built-in
Washing Machine

WMI71441
1400 Spin Speed
7kg Integrated
Washing Machine

LCD Display · Daily Quick Programme · 1400 Spin Speed

Main Benefits

Interactive LCD Display
Shows time remaining and time delay

Daily Quick Programme
Wash a 7kg load in only 39 minutes

High Spin Speed
Extracts more water and saves time drying

Additional Benefits

- Time delay function (0-24 hours)
- 16 programmes
- Automatic water level reduction for half or small loads
- Variable spin speed and temperature
- Easy access and unique design liquid detergent compartment
- Wide angle opening door

A+ Energy Rating

Capacity	Colour options
7kg	White

Dimensions
W: 60cm H: 82cm D: 54cm

Built-in
Washer Dryer

WDIC7523002
Washer Dryer with 7kg
Wash and 5kg Dry Capacity

ProSmart Inverter Motor · Wash & Wear Programme · 16 Programmes

Main Benefits

ProSmart Inverter Motor
Provides a more energy efficient and quieter operation and comes with a 10 year warranty for extra peace of mind

Wash & Wear Programme
Wash and dry up to 5 shirts in 60 minutes, solving any last minute clothing dilemmas

16 Programmes
Giving you a wide variety to choose from

Additional Benefits

- Wash through dry programmes
- Quick full load wash programme - 7kg in 28 minutes
- Quick 14 minute small load programme
- Extra large door

B Energy Rating

Capacity	Spin Speed
7kg Wash 5kg Dry	1200rpm

Dimensions
W: 60cm H: 82cm D: 55cm

Built-in
Dishwasher

DIN14C10
Full Size Integrated
Dishwasher

12 Place Settings · Clean & Shine Programme · Time Delay

Main Benefits

Clean & Shine Programme
Perfect cleaning and drying in 90 minutes

Time Delay Function (3, 6 or 9 hours)
Wash when it's convenient

Height Adjustable Upper Basket
To make room for larger items in the bottom basket

Additional Benefits

- 4 programmes and 4 wash temperatures
- 12 place settings capacity
- 12 litre water consumption
- 49 decibels noise level
- Half load function
- Folding cup racks and plate supports

A+ Energy Rating

Place Settings	Noise Level
12	49dB

Dimensions
W 60cm H 82cm D 55cm

Freestanding
Cookers

EDC633W/K
60cm Double Oven
Electric Cooker

Fan Air Heating · 4 Zone Rapidlite · 69L Capacity

Main Benefits

Fan Air Heating System
Ensures speedy oven heating and faster cooking times

Extra Capacity
Seconday conventional oven and grill

4 Zone Rapidlite Hob
Fast pan heating and hot hob indicators for safety

Additional Benefits

- LED timer and clock helps to keep track of cooking times
- Removable inner door glass
- Enamel oven lining makes cleaning easier
- 3 wire shelves and grill pan included

A Energy Rating Main Oven
A Energy Rating Top Oven

Capacity	Colour options
Main: 69L Top: 36L	White/Black

Dimensions
W: 60cm H: 90cm D: 60cm

BCDVC503W
50cm Double Oven
Electric Cooker

Fan Air Heating · 4 Zone Rapidlite · 58L Capacity

Main Benefits

Fan Air Heating System
Ensures speedy oven heating and faster cooking times

Extra Capacity
Secondary conventional oven and grill

4 Zone Rapidlite Hob
Fast pan heating and hot hob indicators for safety

Additional Benefits

- Removable inner door glass
- Enamel oven lining makes cleaning easier
- 3 wire shelves and grill pan set included

A Energy Rating Main Oven
A Energy Rating Top Oven

Capacity	Colour options
Main: 58L Top: 31L	White

Dimensions
W 50cm H 90cm D 60cm

BCDP503W
50cm Double Oven
Electric Cooker

Fan Air Heating · Easy Clean · 58L Capacity

Main Benefits

Fan Air Heating System
Ensures speedy oven heating and faster cooking times

Extra Capacity
Secondary conventional oven and grill

4 Zone Sealed Plate Hob
Provides space for pan heating

Additional Benefits

- Removable inner door glass
- Enamel oven lining makes cleaning easier
- 3 wire shelves and grill pan set included

A Energy Rating Main Oven
A Energy Rating Top Oven

Capacity	Colour options
Main: 58L Top: 31L	White

Dimensions
W: 50cm H: 90cm D: 60cm

ESS611W
60cm Single Oven
Electric Cooker

Fan Air Heating · Easy Clean · 66L Capacity

Main Benefits

Fan Air Heating System
Ensures speedy oven heating and faster cooking times

Integrated Grill
Offers different cooking options

4 Zone Sealed Plate Hob
Provides space for pan heating

Additional Benefits

- Removable inner door glass
- Enamel oven lining makes cleaning easier
- 2 wire shelves and grill pan set included

A Energy Rating

Capacity	Colour options
66L	White

Dimensions
W: 60cm H: 90cm D: 60cm

Freestanding
Cookers

BCSP50W/X
50cm Single Oven
Electric Cooker

Conventional Main Oven | Easy Clean | 60L Capacity

Main Benefits

Conventional Main Oven
Provides ample space for cooking

Integrated Grill
Offers different cooking options

4 Zone Sealed Plate Hob
Provides space for pan heating

Additional Benefits

- Removable inner door glass
- Enamel oven lining makes cleaning easier
- 1 wire shelf and grill pan set included

A Energy Rating

Capacity	Colour options
60L	White/ Stainless Steel

Dimensions
W: 50cm H: 90cm D: 60cm

EDG6L33W
60cm Double Oven
Gas Cooker

Gas Oven | Easy Clean | 72L Capacity

Main Benefits

Gas Main Oven
Delivers great cooking results and can be used for "zone" cooking

Extra Capacity
Seconday gas oven and grill

4 Burner Gas Hob
With both rapid and simmer burners for a variety of pan sizes

Additional Benefits

- LED timer and clock helps to keep track of cooking times
- Glass lid with auto shut off valve
- Removable inner door glass
- Enamel oven lining makes cleaning easier
- 3 wire shelves and grill pan set included

A+ Energy Rating Main Oven
A Energy Rating Top Oven

Capacity	Colour options
Main: 72L Top: 32L	White

Dimensions
W: 60cm H: 90cm D: 60cm

BCDVG505W
50cm Double Oven
Gas Cooker

Gas Oven | Easy Clean | 61L Capacity

Main Benefits

Gas Main Oven
Delivers great cooking results and can be used for "zone" cooking

Extra Capacity
Secondary gas oven and grill

4 Burner Gas Hob
With both rapid and simmer burners for a variety of pan sizes

Additional Benefits

- Glass lid with auto shut off valve
- Removable inner door glass
- Enamel oven lining makes cleaning easier
- 3 wire shelves and grill pan set included

A+ Energy Rating Main Oven
A Energy Rating Top Oven

Capacity	Colour options
Main: 61L Top: 27L	White

Dimensions
W: 50cm H: 90cm D: 60cm

BCDG504W
50cm Twin Cavity
Gas Cooker

Gas Oven | Easy Clean | 61L Capacity

Main Benefits

Gas Main Oven
Delivers great cooking results and can be used for "zone" cooking

Separate Gas Grill
Offers flexible cooking options and extra cooking space

4 Burner Gas Hob
With both rapid and simmer burners for a variety of pan sizes

Additional Benefits

- Glass lid with auto shut off valve
- Removable inner door glass
- Enamel oven lining makes cleaning easier
- 3 wire shelves and grill pan set included

A+ Energy Rating

Capacity	Colour options
Main: 61L Top: 27L	White

Dimensions
W: 50cm H: 146cm D: 60cm

ESG611W
60cm Single Oven
Gas Cooker

Gas Oven | Easy Clean | 60L Capacity

Main Benefits

Gas Main Oven
Delivers great cooking results and can be used for "zone" cooking

Integrated Grill
Offers different cooking options

4 Burner Gas Hob
With both rapid and simmer burners for a variety of pan sizes

Additional Benefits

- Removable inner door glass
- Enamel oven lining makes cleaning easier
- 2 wire shelves and grill pan set included

A Energy Rating

Capacity	Colour options
60L	White

Dimensions
W: 60cm H: 90cm D: 60cm

BCSG50W
50cm Single Oven
Gas Cooker

Gas Oven | Easy Clean | 55L Capacity

Main Benefits

Gas Main Oven
Delivers great cooking results

Integrated Grill
Offers different cooking options

4 Burner Gas Hob
With both rapid and simmer burners for a variety of pan sizes

Additional Benefits

- Removable inner door glass
- Enamel oven lining makes cleaning easier
- 1 wire shelf and grill pan set included

A Energy Rating

Capacity	Colour options
55L	White

Dimensions
W: 50cm H: 90cm D: 60cm

Freestanding
Refrigeration

ASL141X
American Style
Fridge Freezer

Neofrost | Odour Filter | Twist and Serve Ice Cube Makers

Main Benefits

Neofrost Technology
Uses two fans and two evaporators to provide 2x faster cooling and 2x more humidity, keeping your food fresher for longer

Odour Filter
Fitted with a carbon odour filter to help eliminate bad smells

Twist and Serve Ice Cube Makers
The perfect accessory to make and store ice cubes

Additional Benefits

- Huge capacity - fits 26 bags of shopping inside
- Air flow cooling maintains an even temperature on every shelf
- Chiller compartment
- Chrome wine rack
- LED display

A+ Energy Rating	
Capacity	**Colour options**
Fridge: 368L Freezer: 190L	Stainless Steel
Dimensions W 91cm H 179cm D 72cm	

CCFH1675W
60cm Fridge Freezer

Frost Free | Freezer Guard | Open Door Alarm

Main Benefits

Frost Free
Prevents ice building up and resticting valuble storage space

Freezer Guard Technology
The freezer will continue to work even in surrounding temperatures as low as -15°C, ideal for placing in an unheated room

Open Door Alarm
Audible alert to warn you if the fridge door is open

Additional Benefits

- Good capacity - fits 15 bags of shopping inside
- Antibacterial door seals
- Ice bank tray
- Reversible doors
- Clear freezer fronts
- Adjustable glass shelves in the fridge
- Large salad crisper

A+ Energy Rating	
Capacity	**Colour options**
Fridge: 209L Freezer: 97L	White
Dimensions W: 60cm H: 175cm D: 65cm	

CCFM1582W
55cm Fridge Freezer

Frost Free | Freezer Guard | LED Lighting

Main Benefits

Frost Free
Prevents ice building up and resticting valuble storage space

Freezer Guard Technology
The freezer will continue to work even in surrounding temperatures as low as -15°C, ideal for placing in an unheated room

LED Lighting
Brighter and more energy efficient than a standard bulb

Additional Benefits

- Good capacity - fits 14 bags of shopping inside
- Antibacterial door seals
- Ice bank tray
- Reversible doors
- Clear freezer fronts
- Adjustable glass shelves in the fridge
- Large salad crisper

A+ Energy Rating	
Capacity	**Colour options**
Fridge: 170L Freezer: 97L	White
Dimensions W: 54.5cm H: 182cm D: 60cm	

CCFM1552W
55cm Fridge Freezer

Frost Free | Freezer Guard | LED Lighting

Main Benefits

Frost Free
Prevents ice building up and resticting valuble storage space

Freezer Guard Technology
The freezer will continue to work even in surrounding temperatures as low as -15°C, ideal for placing in an unheated room

LED Lighting
Brighter and more energy efficient than a standard bulb

Additional Benefits

- Capacity - fits 11 bags of shopping inside
- Antibacterial door seals
- Reversible doors
- Clear freezer fronts
- Adjustable glass shelves in the fridge
- Large salad crisper

A+ Energy Rating	
Capacity	**Colour options**
Fridge: 145L Freezer: 68L	White
Dimensions W: 54.5cm H: 152cm D: 60cm	

FCFM1545W
55cm Tall Freezer

Frost Free | Freezer Guard | Fast Freeze

Main Benefits

Frost Free
Prevents ice building up and resticting valuble storage space

Freezer Guard Technology
The freezer will continue to work even in surrounding temperatures as low as -15°C, ideal for placing in an unheated room

Fast Freeze Function
Allows you to quickly freeze your fresh food, helping to preserve nutrients and taste

Additional Benefits

- Capacity - fits 8 bags of shopping inside
- High temperature warning light
- Antibacterial door seal
- Ice bank tray
- Reversible door

A+ Energy Rating	
Capacity	**Colour options**
168L	White
Dimensions W: 54.5cm H: 145.5cm D: 59.5cm	

LCSM1545W
55cm Tall Larder Fridge

Chrome Wine Rack | Adjustable Glass Shelves | LED Lighting

Main Benefits

Chrome Wine Rack
Ideal for storing wine and two litre soft drink bottles

Adjustable Glass Shelves
Flexiblity to change shelf height, useful when storing tall items

LED Lighting
Brighter and more energy efficient than a standard bulb

Additional Benefits

- Good capacity - fits 14 bags of shopping inside
- Antibacterial door seal
- Reversible door
- Large salad crisper
- Auto defrost prevents ice build-up

A+ Energy Rating	
Capacity	**Colour options**
252L	White
Dimensions W: 54.5cm H: 145.5cm D: 59.5cm	

UFC524W
50cm Undercounter Freezer

Freezer Guard | Clear Freezer Fronts | Antibacterial Door Seal

Main Benefits

Freezer Guard Technology
The freezer will continue to work even in surrounding temperatures as low as -15°C, ideal for placing in an unheated room

Clear Freezer Fronts
Enabling you to easily identify food stored in the freezer

Antibacterial Door Seal
Prevents bacteria from forming and entering the freezer

Additional Benefits

- Capacity - fits 3 bags of shopping inside
- Reversible door

A+ Energy Rating	
Capacity	**Colour options**
65L	White
Dimensions W 47.5cm H 82cm D 53cm	

ULC532W
50cm Undercounter Larder Fridge

Adjustable Glass Shelves | Reversible Door | Antibacterial Door Seal

Main Benefits

Adjustable Glass Shelves
Flexibility to change shelf height, useful when storing tall items

Reversible Door
Convenient feature, if you are restricted on where you can place your appliance

Antibacterial Door Seal
Prevents bacteria from forming and entering the fridge

Additional Benefits

- Capacity - fits 5 bags of shopping inside
- Large salad crisper
- Auto defrost prevents ice build-up

A+ Energy Rating	
Capacity	**Colour options**
88L	White
Dimensions W 47.5cm H 82cm D 53cm	

Freestanding
Washing Machines

WMC1282W
1200 Spin Speed
8kg Washing Machine

Daily Quick Programme | LED Display | Time Delay (0-19 hours)

Main Benefits

Daily Quick Programme
Wash a large 8kg load in only 28 minutes

LED Display
Keeps you informed by showing the time remaining until the end of the wash

Slim Depth for Easy Installation
Ideal for kitchens with shallower units or with plumbing behind

Additional Benefits

- Time delay function (0-19 hours)
- 15 programmes
- Automatic water level reduction for half or small loads
- Variable spin speed and temperature
- Large porthole door

A+++ Energy Rating	
Capacity	**Spin Speed**
8kg	1200rpm
Dimensions W 60cm H 85cm D 54cm	

WMC126W
1200 Spin Speed
6kg Washing Machine

Daily Quick Programme | LED Progress Lights | Time Delay (3, 6 or 9 hours)

Main Benefits

Daily Quick Programme
Wash a 6kg load in only 28 minutes

LED Progress Lights
Keeps you up to date with the status of your wash

Slim Depth for Easy Installation
Ideal for kitchens with shallower units or with plumbing behind

Additional Benefits

- Time delay function (3, 6 or 9 hours)
- 15 programmes
- Automatic water level reduction for half or small loads
- Variable spin speed and temperature
- Large porthole door

A+ Energy Rating	
Capacity	**Spin Speed**
6kg	1200rpm
Dimensions W 60cm H 85cm D 45cm	

Freestanding
Tumble Dryers

DCSC821W
8kg Condenser Tumble Dryer with Sensor Programmes

Sensor Programmes | LED Progress Lights | Time Delay (3, 6 or 9 hours)

Main Benefits

Sensor Programmes
The programme automatically stops when the desired dryness level is achieved, resulting in better protection for your clothes and higher energy efficiency

LED Progress Lights
Enables you to track the progress of the programme as well as the dryness levels

Large Round Porthole Door
Allows for easy loading and unloading of larger items

Additional Benefits

- 10 sensor and 5 timed programmes
- Time delay function (3, 6 or 9 hours)
- Automatic anti-creasing feature
- Reverse action drum prevents clothing from tangling and creasing
- Special programmes including Rapid Dry, Jeans & Shirts

B Energy Rating	
Capacity	**Colour options**
8kg	White
Dimensions W 60cm H 85cm D 60cm	

DVSC711W
7kg Vented Tumble Dryer with Sensor Programmes

Sensor Programmes | LED Progress Lights | Large Porthole Door

Main Benefits

Sensor Programmes
The programme automatically stops when the desired dryness level is achieved, resulting in better protection for your clothes and higher energy efficiency

LED Progress Lights
Enables you to track the progress of the programme as well as the dryness levels

Large Porthole Door
Allows for easy loading and unloading of larger items

Additional Benefits

- 10 sensor and 5 timed programmes
- Automatic anti-creasing feature
- Reverse action drum prevents clothing from tangling and creasing
- Special programmes including Rapid Dry, Jeans & Shirts

C Energy Rating	
Capacity	**Colour options**
7kg	White
Dimensions W 60cm H 85cm D 54cm	

Freestanding
Washer Dryer

WDC7523002W
Washer Dryer with 7kg Wash and 5kg Dry Capacity

Prosmart Inverter Motor | Wash & Wear Programme | 16 Programmes

Main Benefits

ProSmart Inverter Motor
Provides a more energy efficient and quieter operation and comes with a 10 year warranty for extra peace of mind

Wash & Wear Programme
Wash and dry up to 5 shirts in 60 minutes, solving any last minute clothing dilemmas

16 Programmes
Giving you a wide variety to choose from

Additional Benefits

- Wash through dry programmes
- Quick full load wash programme – 7kg in 28 minutes
- Quick 14 minute small load programme
- Extra large door

B Energy Rating	
Capacity	**Spin Speed**
Wash: 7kg Dry: 5kg	1200rpm
Dimensions W 60cm H 85cm D 54cm	

Freestanding
Dishwashers

DFS04C10W
Slimline Dishwasher

10 Place Settings | Clean & Shine Programme | 4 Programmes

Main Benefits

Clean & Shine Programme
Perfect cleaning and drying in 90 minutes

4 Programmes and 4 Wash Temperatures
Includes the Intensive programme for very dirty dishes

Height Adjustable Upper Basket
To make room for larger items in the bottom basket

Additional Benefits

- 10 place settings capacity
- 13 litre water consumption
- 49 decibels noise level
- Removable cutlery basket
- Half load function

A+ Energy Rating	
Place Settings	**Colour options**
10	White
Dimensions W 45cm H 85cm D 59.8cm	

DFC04C10W
Full Size Dishwasher

12 Place Settings | Clean & Shine Programme | 4 Programmes

Main Benefits

Clean & Shine Programme
Perfect cleaning and drying in 90 minutes

4 Programmes and 4 Wash Temperatures
Includes the Intensive programme for very dirty dishes

Height Adjustable Upper Basket
To make room for larger items in the bottom basket

Additional Benefits

- 12 place settings capacity
- 15 litre water consumption
- 49 decibels noise level
- Removable cutlery basket
- Half load function

A+ Energy Rating	
Place Settings	**Colour options**
12	White
Dimensions W 60cm H 85cm D 59.8cm	

Installation Diagrams

Installation Diagrams

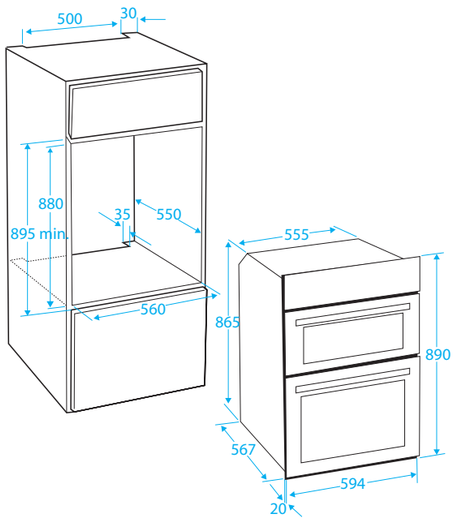

CDF22309X

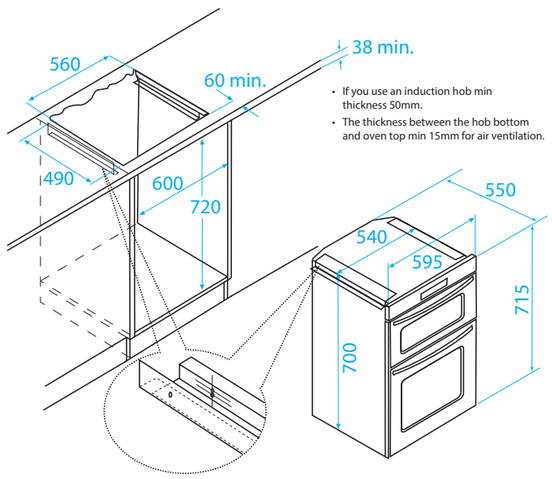

- If you use an induction hob min thickness 50mm.
- The thickness between the hob bottom and oven top min 15mm for air ventilation.

CTF22309X

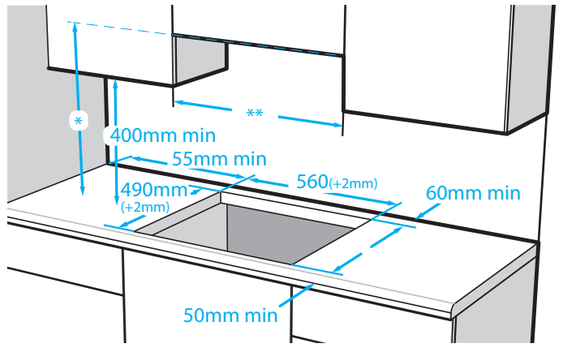

*Minimum height to extractor as recommended in extractor instruction manual

**Minimum distance between cabinet must be equal to width of hob

CIHV21B

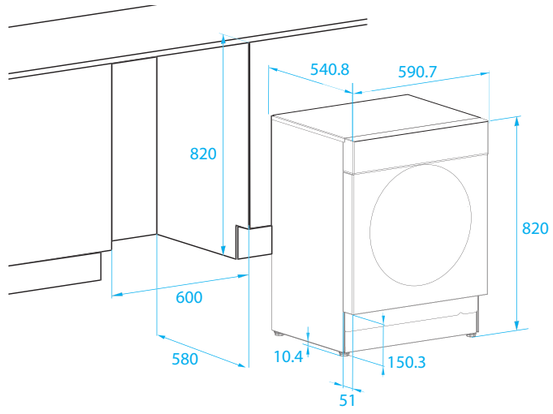

WMI71441 | WDIC7523002

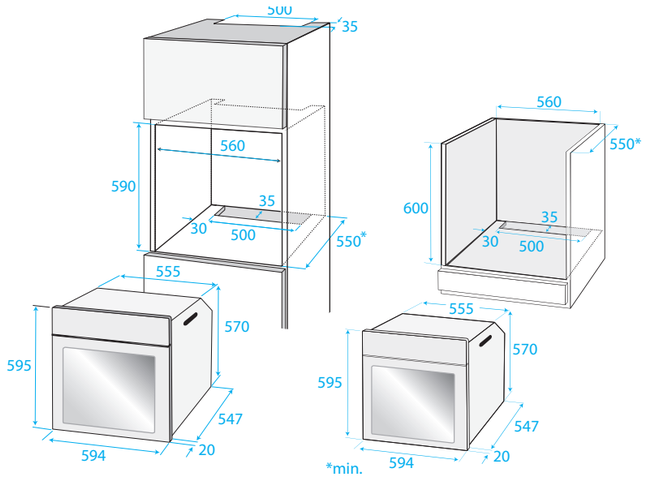

CIF71W/X | CIF81W/X

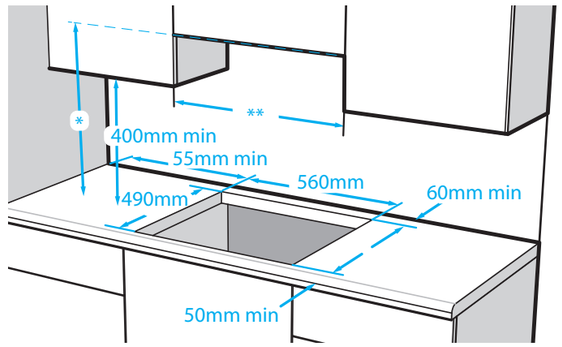

*Minimum height to extractor as recommended in extractor instruction manual

**Minimum distance between cabinet must be equal to width of hob

CIHG21SX/W

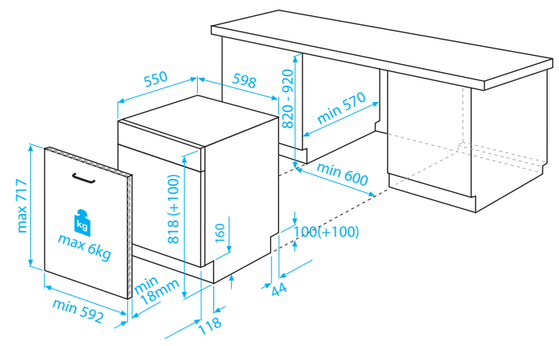

DIN14C10

FC BARCELONA PREMIUM PARTNER

www.beko.co.uk

March / 2016